Section 1

Bruce Dennla

Bruce Dennla

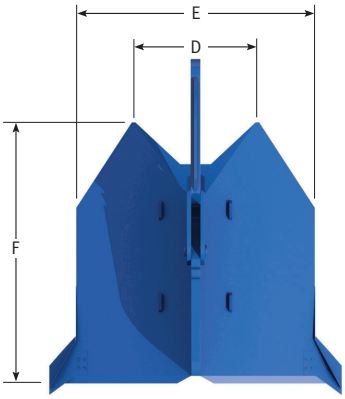

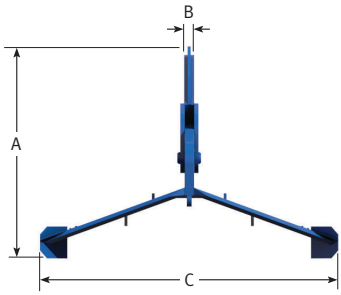

Omni-Directional Dennla	A mm	B mm	C mm	D mm	E mm	F mm
14m²	3384	160	4836	2077	3930	4308

NOTE *Other sizes are available. Specification sheet is available on request.*

January 2015